auma®

LE 12.1 – LE 200.1

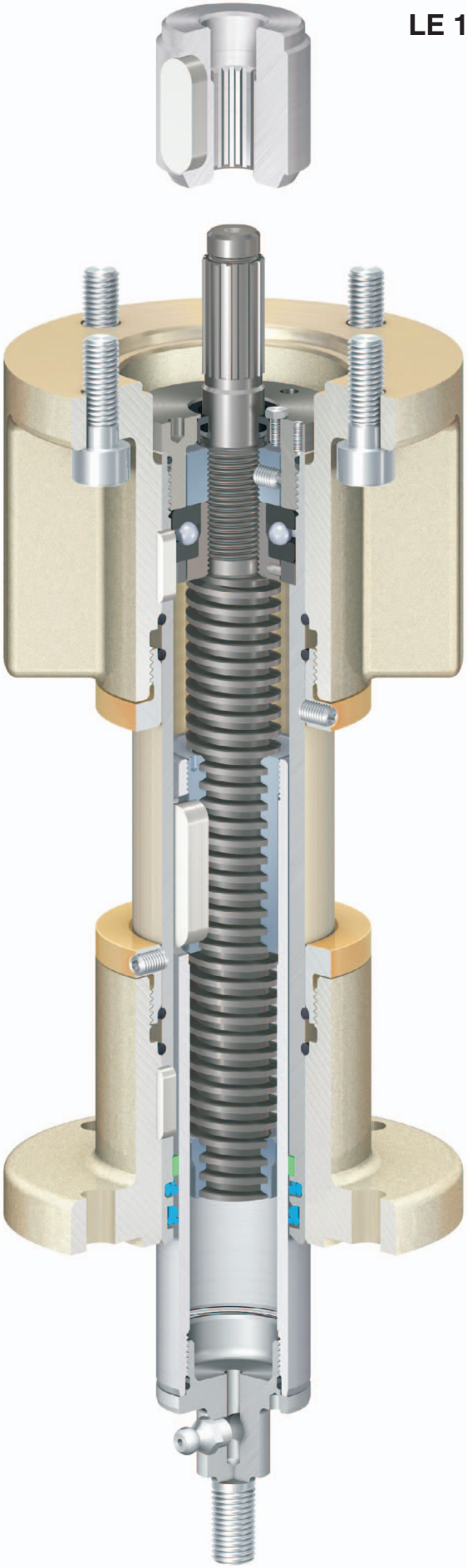

1.09
Y000.399/001