auma®

# LEN 12.1 – LEN 200.1

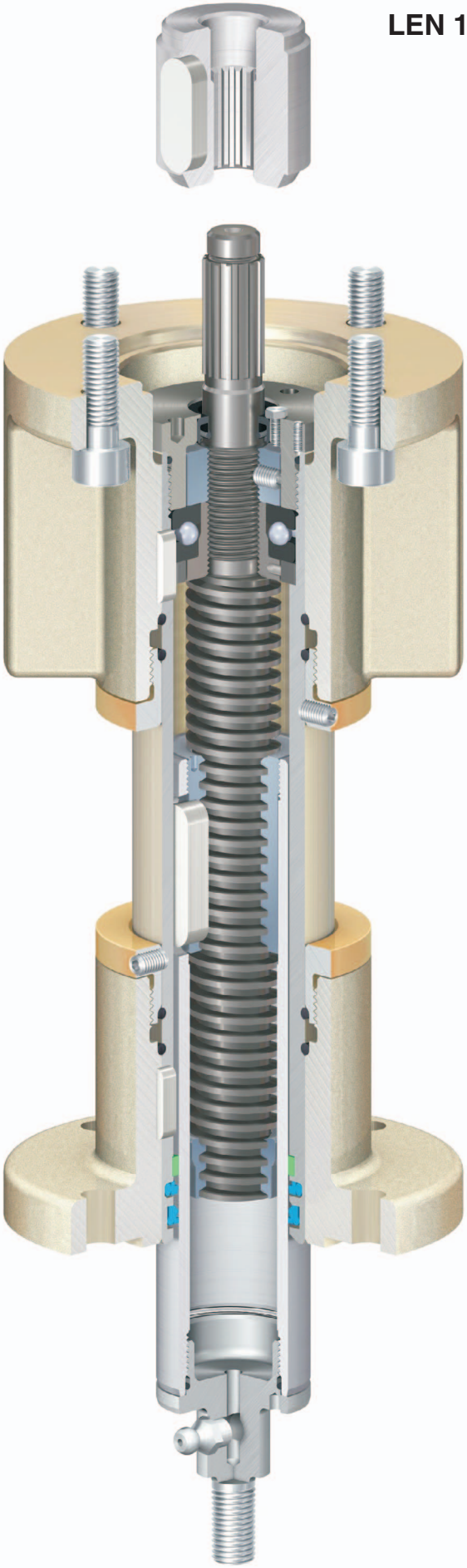

1.09
Y001.252/001